Electrolux PROFESSIONAL

Digital Cabinets
Digital Ice-cream Preserver 1 Door 720lt (-28/-12)

ITEM #

MODEL #

NAME #

SIS #

AIA #

691357 (ICF61FHC) 1-door Ice Cream Preserver 720lt, -28/-12°C, AISI 304, R290

Short Form Specification

Item No.

External door, control panel, sides and bottom panels in 304 AISI stainless steel (external back panel in galvanized steel). Internal panels in 304 AISI stainless steel. Internal bottom panel in a single pressed sheet with rounded corners. Body insulation thickness 65mm. Runners and supports in stainless steel. Grid supports fully removable without tools. 1 right hinged full door with lock and microswitch to stop the fan when door is opened. Wide access: 72cm of frontal grid space. Built-in refrigeration unit; ventilated operating mode; ELECTRONIC control equipped with: history (HACCP) for critical high temperature, alarm service, full diagnostic; electronic defrost only when required; automatic evaporation of defrost water by hot gas; external digital temperature display. Internal lighting. Operating temperature: -28° C (at 38°C ambient temp.) and -22°C (at 43°C ambient temp.). CFC and HCFC free. R290 gas in refrigeration circuit. Gas in foam: Cyclopentane. Capacity 60 basins (mm165x360x125h). Supplied with N. 6 grids 720x540 mm.

APPROVAL:

Main Features

- Large storage area suitable to contain 720x540 mm grids to improve net capacity.
- Connectivity ready for real time access to connected appliances from remote and data monitoring (requires optional accessory).
- Large digital white-digit display with cabinet temperature display and setting and turbo frost cycle (to rapidly cool warm loads).
- IPX5 frontal water protection.
- Fully compliant HACCP digital control: when temperature exceeds critical limits, acoustic and visual alarms are activated. Up to two months of event are kept in memory.
- Optimized airflow within the chamber guarantees uniformity of temperature on all grids.
- Hidden evaporator thus guaranteeing higher storage capacity and less corrosion problems.
- Greater storage space: internal structure with numerous charging positions available to host grids, ensuring higher net capacity.
- Model requires only 1 phase 230V/50Hz supply and can be plugged straight into an existing power socket.
- Prearranged to fit RS485 port to facilitate connection to a remote computer and integrated HACCP systems.
- Complies with main international certification bodies and is CE marked.
- Prearranged for remote alarm.
- Low noise level.
- Self closing and on site reversible left/right doors.
- This appliance is intended for use in ambient temperatures up to 40°C.
- Tropicalized unit.

Construction

- Stainless steel AISI 304 external panels (galvanized external back).
- Refrigerant type: R290.
- Inner cell with rounded corners, bottom pressed in only one piece.
- Stainless steel runners and supports easily disassembled.
- Internal components removable without the use of tools to facilitate cleaning operations.
- Pressed stainless steel door handle without joints gathering dust and dirt.
- Easy access to the main components for maintenance.
- Developed and produced in ISO 9001 and ISO 14001 certified factory.

- Automatic heated door frame.
- Lockable door.

Sustainability

- CFC and HCFC free, highly ecological refrigerant type: R290 (ecological gas in foam: cyclopentane). Hydrocarbon refrigerant gas R290 for the lowest environmental impact (GWP=3), to reduce green house and ozone depletion effects.
- Frost Watch Control: fully automatic defrost starts only when ice is actually building-up in the evaporator and adapt the defrosting duration to guarantee perfect ice removal while optimizing energy efficiency consumption.
- Insulation thickness: 65 mm of polyurethane injected with ecological foaming gas cyclopentane to ensure effective insulation with minimum energy consumption (thermal conductivity: 0,020 W/m*K).
- Removable triple-chamber balloon magnetic gasket to improve insulation and reduce energy consumption and ease of cleaning.
- Optical door microswitch to stop the fan once the door is opened, thus minimizing energy waste.
- Interior LED light to save energy and for best internal visibility.

Included Accessories

- 6 of Runners with 1 shelf for ice cream preserver — PNC 880295

Optional Accessories

- Runners with 1 shelf for ice cream preserver — PNC 880295 ❑
- 2/1GN Plastic-coated grid — PNC 880306 ❑
- Pair of runners for 470 and 720lt prostore cabinets — PNC 880335 ❑
- Plastic-coated grid 700x530mm for Prostore 720l — PNC 880343 ❑

The company reserves the right to make modifications to the products without prior notice. All information correct at time of printing.

2024.10.08

Digital Cabinets
Digital Ice-cream Preserver 1 Door 720lt (-28/-12)

Front

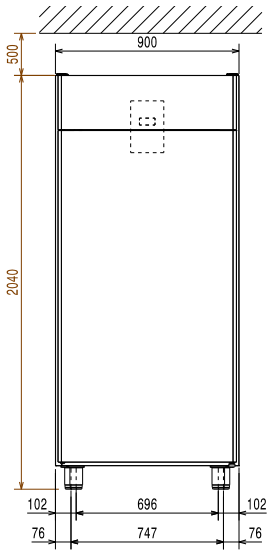

Side

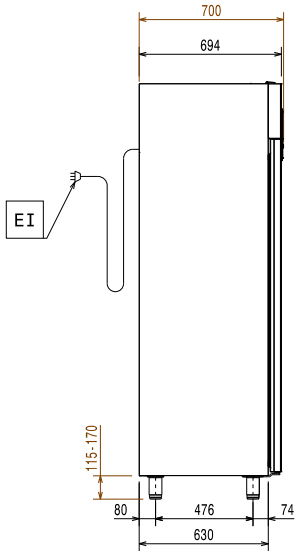

EI = Electrical inlet (power)

Top

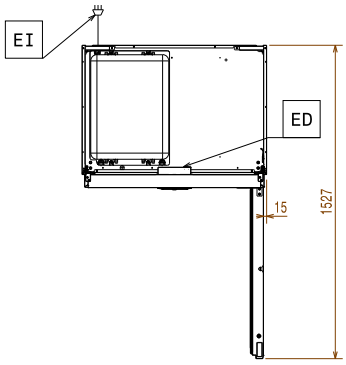

Electric

Supply voltage:	
691357 (ICF61FHC)	220-240 V/1 ph/50 Hz
Electrical power max.:	0.45 kW

Capacity:

Number and type of grids (included):	6 - 720x540
Number and type of basins:	60 (360x165x125h)

Key Information:

Gross capacity:	720 lt
Net Volume:	526 lt
Door hinges:	Right Side
External dimensions, Width:	900 mm
External dimensions, Depth with Doors Open:	1527 mm
External dimensions, Height:	2040 mm
Number and type of doors:	1 Full
Type of external material:	304 AISI

Refrigeration Data

Control type:	Electronic
Compressor power:	3/4 hp
Refrigeration power at evaporation temperature:	-23.3 °C
Operating temperature min.:	-28 °C
Operating temperature max.:	-12 °C
Operating mode:	Ventilated
Cooling unit:	Built-In

Product Information (EU Regulation 2015/1094)

Type of model (EU Reg. 2015/1094):	vertical frozen

ISO Certificates

ISO Standards:	ISO 9001; ISO 14001; ISO 45001; ISO 50001

Sustainability

Energy Class (EU Reg. 2015/1094):	D
Yearly and daily energy consumption (EU Reg. 2015/1094):	2655kWh/year - 7kWh/24h
Climate class (EU Reg. 2015/1094):	Heavy Duty (5)
Energy Efficiency Index-EEI (EU Reg. 2015/1094):	65.33
Refrigerant type:	R290
GWP Index:	3
Refrigeration power:	792 W
Refrigerant weight:	135 g

The company reserves the right to make modifications to the products without prior notice. All information correct at time of printing.

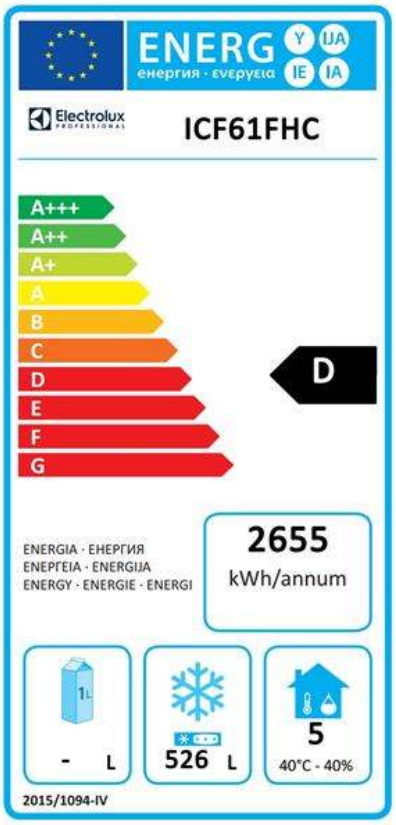

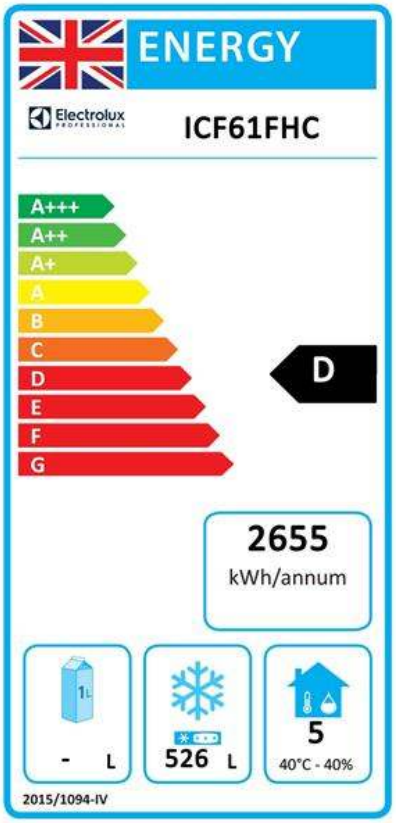

EU energy labelling from 1st July 2016

The European energy labelling scheme for professional refrigerators and freezers is based on requirements setting Minimum Energy Performance standards for commercial refrigeration cabinets sold within the EU. These requirements are designed to drive energy efficiency and environmentally friendly approach for professionals. The European energy labelling scheme will apply to all manufacturers and importers who sell and market products within the EU and it is mandatory across Europe. Important: all products which consume energy above the minimum level will not be able to be sold within the EU from 1 July 2016.

SI 2020 No. 1528.

Important: all products which consume energy above the minimum level will not be able to be sold within the EU from 1 July 2016.

The company reserves the right to make modifications to the products without prior notice. All information correct at time of printing.